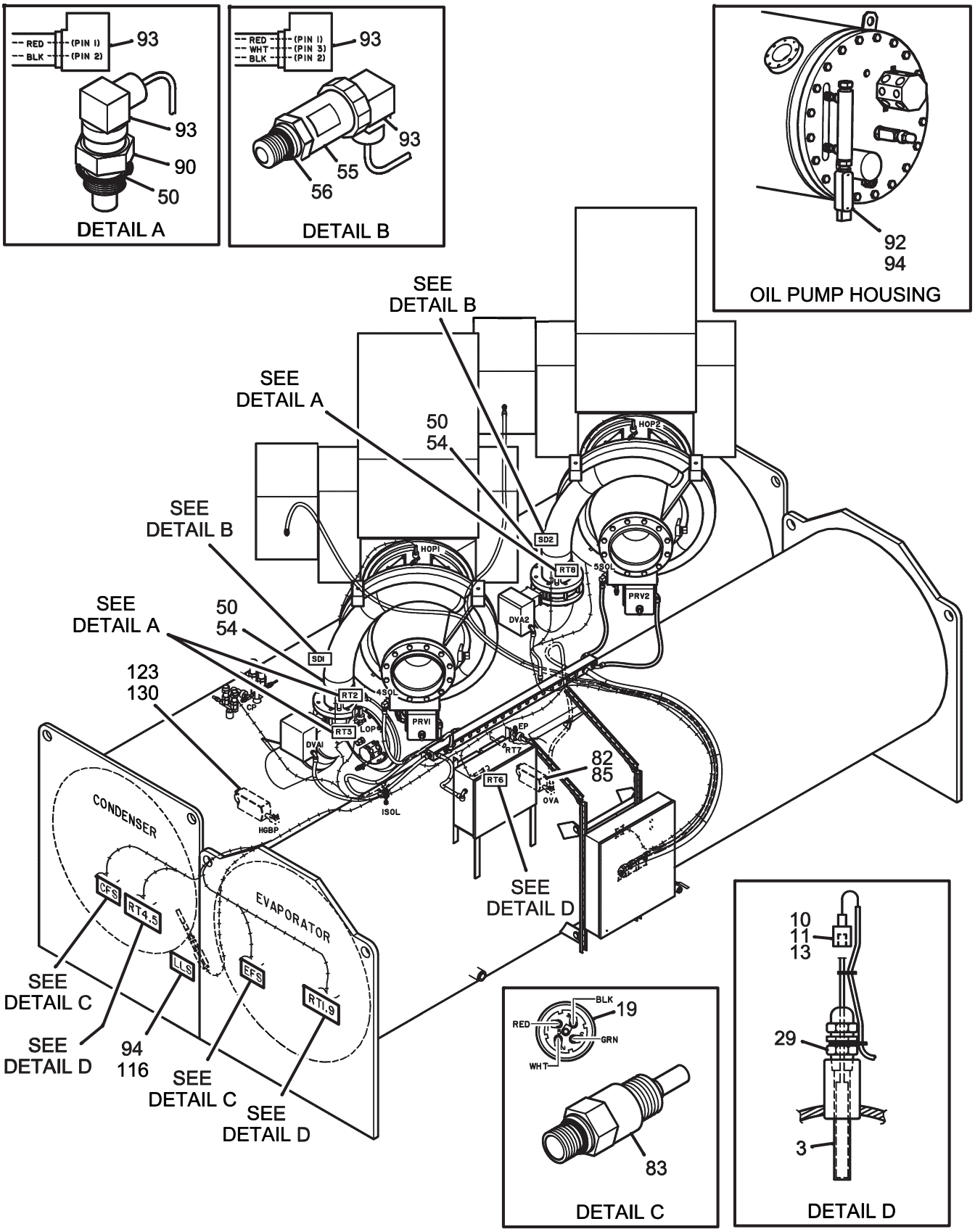

FIGURE 57 - YD SYSTEM WIRING

LD15187