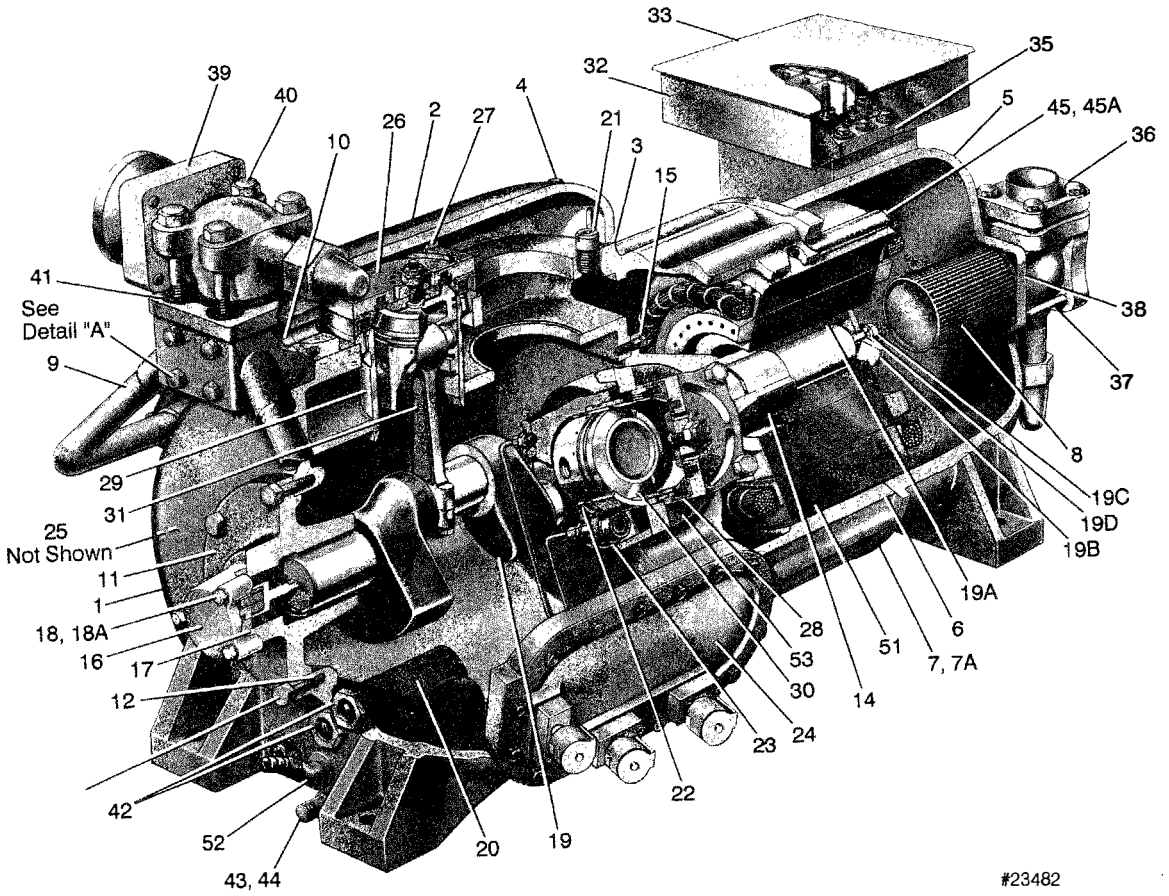

FIG. 1 — COMPRESSOR CUT-A-WAY

DETAIL "A" — MANIFOLD ARRANGEMENTS

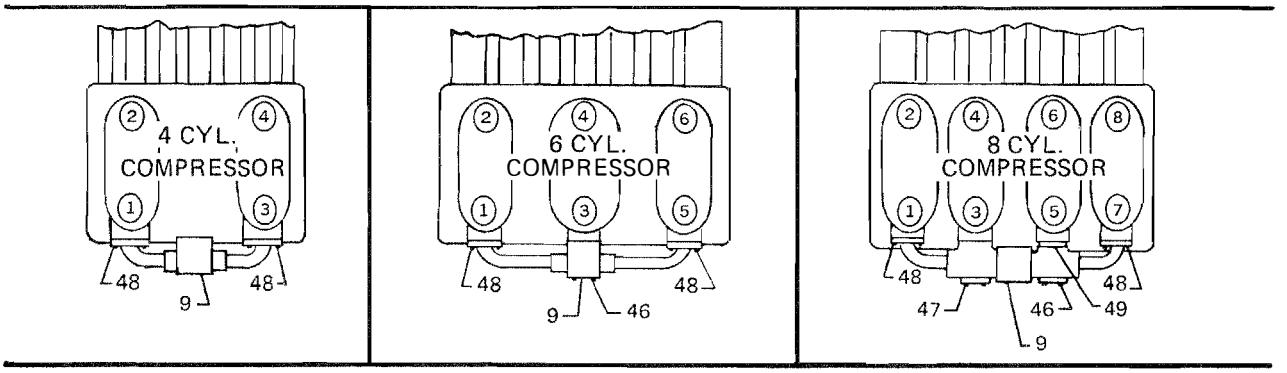

ITEM NO.	DESCRIPTION	COMPRESSOR MODEL		
		4 Cyl.	6 Cyl.	8 Cyl.
1	Housing, Compressor	664-47309	664-47310	664-47311
2	Head, Compressor	664-21612	664-21612	664-21612
	No. Req'd. Per Compressor	2	3	4
3	Gasket, Head	064-21700	064-21700	064-21700
	No. Req'd. Per Compressor	2	3	4
4	Screw, Head 7/16 - 14 x 4	021-16816	021-16816	021-16816
	No. Req'd. Per Compressor	32	48	64
5	Cover, Motor	664-47188	664-47188	664-47203
6	Gasket, Motor Cover to Compressor	064-47186	064-47186	064-47186
7	Screw, Motor Cover to Compr. 1/2 - 13 x 2-1/4	021-01586	021-01586	021-01586
	No. Req'd.	20	20	20
7A	Lockwasher Spg. 1/2	221-05271-800	221-05271-800	221-05271-800
8	Screen, Suction (See Item 38 for Gasket)	026-28473	026-28473	026-28474
9	Manifold, Discharge	664-23147	664-23064	664-21709
10	Gasket, Discharge Manifold	064-21838	064-21838	064-21838
	No. Req'd. Per Compressor	2	3	5
11	Head, Bearing Assy. Oil Pump End	See Figure 9		