VIBRATION ISOLATORS

TABLE 24 - NEOPRENE VIBRATION ISOLATORS

SYSTEM OPERATING WEIGHT		PART NUMBER (Includes Quantity of 4 Pads)	PAD SIZE
KILOGRAMS	POUNDS		
Up to 7423	Up to 16,365	028-14462-000	5.5" x 5.5" (14 x 14 cm)
7424 to 13,107	16,366 to 28,835	028-14459-000	7" x 5.5" (23 x 14 cm)
13,108 to 24,332	28,836 to 53,530	028-14460-000	9" x 7" (23 x 18 cm)

NOTE: * When used with K7. Quantity is 2.

TABLE 25 - SPRING ISOLATORS

SYSTEM OPERATING WEIGHT		PART NUMBER (Includes Quantity 4 Spring Bolts)	QUANTITY (Number of Mounts Per Package)
KILOGRAMS	POUNDS		
4536 to 8873	10,000 to 19,563	029-23716-000	4
8874 to 11,093	19,564 to 24,457	029-21793-000	4
11,094 to 13,982	24,458 to 30,826	029-21376-000	4

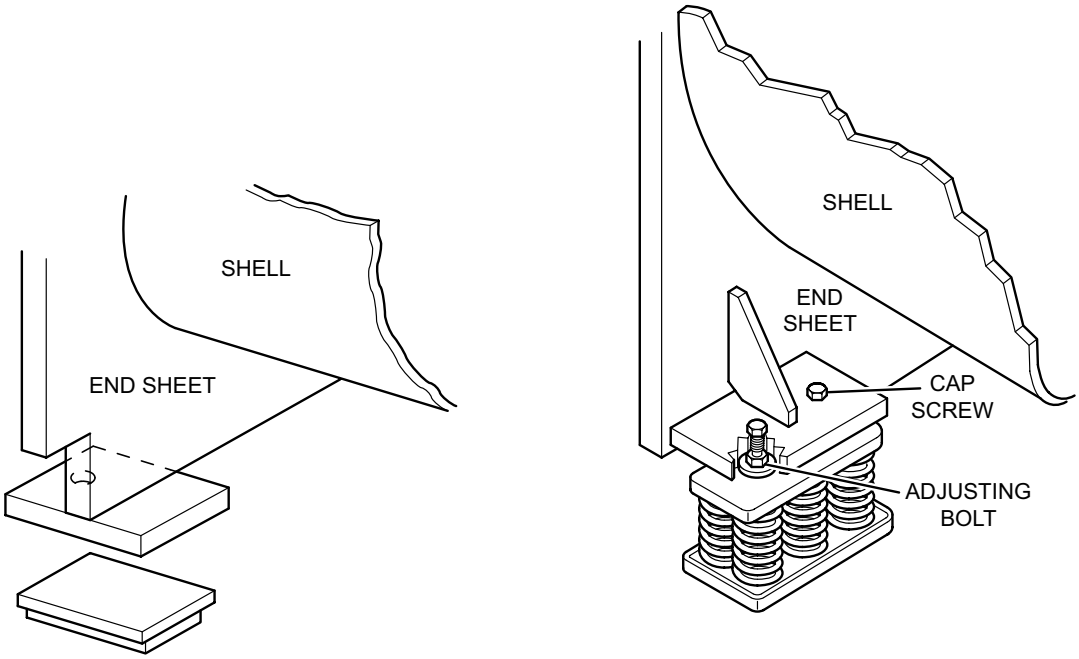

LD13057

FIGURE 38 - NEOPRENE ISOLATORS / SPRING ISOLATORS