OT TURBOPAK SYSTEM PARTS

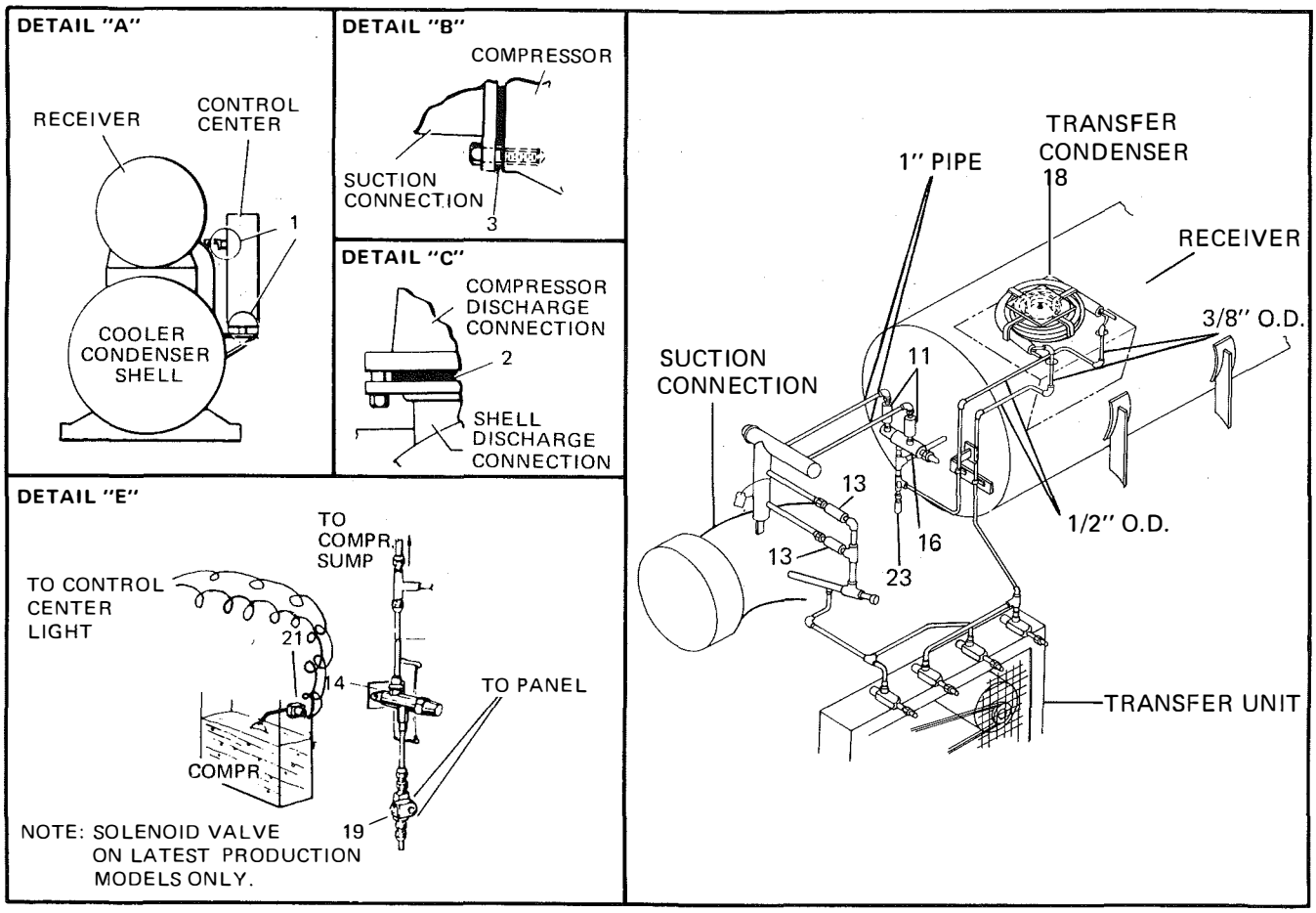

FIG. 3 – TURBOPAK SYSTEM DETAILS

Item	Part Description	Models					
		OT M & N		OT P & R		OT S & T	
		Part No.	Quan.	Part No.	Quan.	Part No.	Quan.
1	Isolator, Control Panel	028-02162	3	028-02162	3	028-02162	3
2	Gasket, Discharge	070-12208	1	070-12208	1	070-12208	1
3	Gasket, Suction Connection	070-10632 (12")	1	070-10632 (14")	1	070-10632 (14")	1
4	Coupling Dresser	023-07146	1	023-07145	1	023-07145	1
5	Dehydrator	026-13508	1	026-13508	1	026-13508	1
6	Valve, Stop	022-05264	1	022-05264	1	022-05264	1
7	Valve, Stop	022-01873	2	022-01873	2	022-01873	2
8	Valve, Stop	022-00016	1	022-00016	1	022-00016	1
11	Valve, Relief 1"	022-05255	2	022-05255	2	022-05255	2
12	Valve, Angle Stop	022-03673	1	022-03673	1	022-03673	1
13	Valve, Relief 1-1/4"	022-05256	2	022-05256	2	022-05256	2
14	Valve Stop, Globe	022-03709	1	022-03709	1	022-03709	1
15	Valve, Stop	022-05297	1	022-05297	1	022-05297	1
16	Valve, Stop, 3 Way 1"	022-03758	1	022-03758	1	022-03758	1
17	Indicator, Liquid Level	367-67997-019	1	367-67997-018	1	367-67997-018	1
18	Transfer Condenser	026-10001	1	026-10001	1	026-10001	1
19	Valve, Solenoid	025-16914	1	025-16914	1	025-16914	1
20	Filter	366-70469	1	366-70469	1	366-70469	1
21	Switch, Float	024-16762	1	024-16762	1	024-16762	1
22	Oil Cooler	366-46631	1	366-46631	1	366-46631	1