MODELS LTD85 AND LTD95
LINKAGE - EXTERNAL PRV
ELECTRICALLY OPERATED

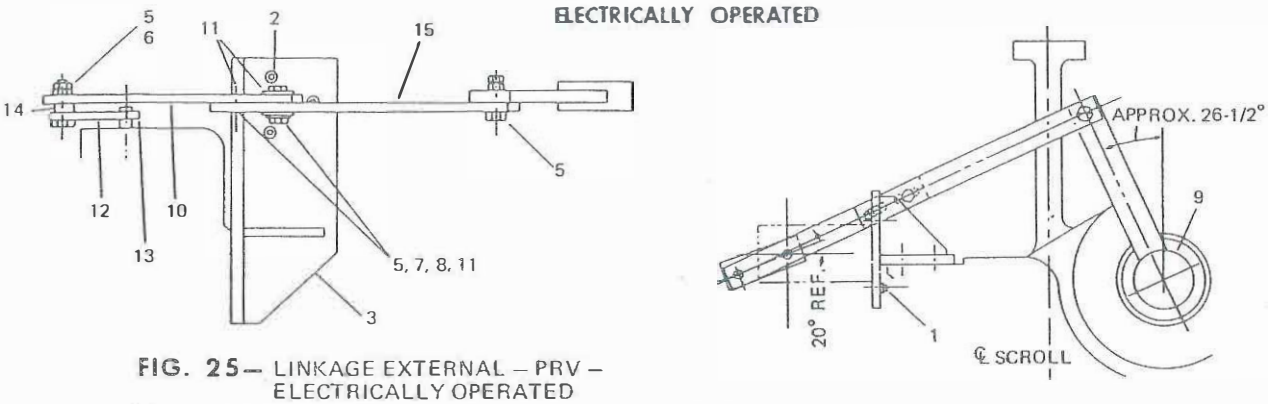

FIG. 25— LINKAGE EXTERNAL – PRV – ELECTRICALLY OPERATED

ITEM	PART DESCRIPTION	QUAN.	PART NO.
1	SCREW, CAP. 1/4–20UNC x 3/4 LG.	3	021-11741
2	SCREW, CAP. 3/8–16UNC x 1 LG.	3	021-11149
3	BRACKET, MOTOR MOUNTING	1	364-32605
4	BOLT, SHLD. 1/4–20 x 1-3/8	1	064-28262
5	NUT, HEX. 1/4–20UNC–2B	6	021-00450
6	BOLT, SHLD. 1/4–20 x 1-5/8	1	064-33744
7	LOCKWASHER 1/4	2	021-05267
8	SCREW, CAP. 1/4–20UNC x 1 LG.	2	021-11914
9	LEVER, PRV DEVICE	1	364-28236
10	LINK, EXT. PRV & MOT	1	064-32604
11	WASHER 9/32 ID	4	021-05165
12	ARM, PRV MOTOR	1	064-33690
13	SCREW, SET HEX SOC #10–24UNC x 3/8	1	021-03910
14	RING, FILL	1	064-29258
15	LINK, EXT. PRV & MOT.	1	064-32609

AIR OPERATED

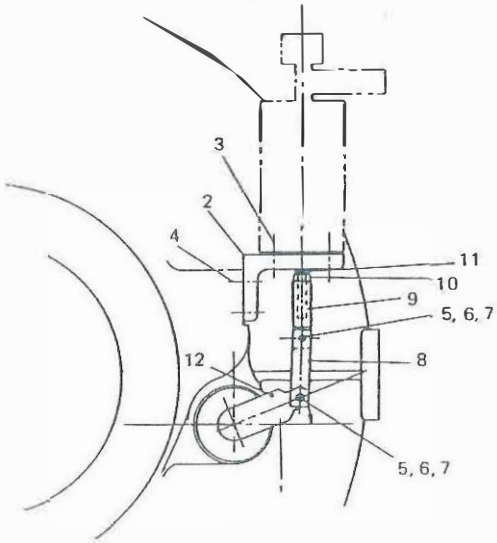

FIG. 26— LINKAGE EXTERNAL – PRV – AIR OPERATED

ITEM	PART DESCRIPTION	QUAN.	PART NO.
1	LEVER, PRV DEVICE	1	064-28622
2	BRACKET	1	064-28621
3	SCREW, CAP. 12 PT 3/8 x 1-1/8	4	021-11148
4	SCREW, CAP. 12 PT 3/8 x 1	3	021-11141
5	PIN, LINKAGE	2	064-07127
6	WASHER, PLAIN 13/32 I.D.	4	021-01274
7	PIN, COTTER	4	021-01083
8	LINK, EXT.	2	064-15692
9	CLEVIS, CONOMOTOR	1	064-07125
10	NUT, HEX. HEAVY 5/8	1	021-07787
11	WASHER, PLAIN 21/32 I.D.	7	021-01239
12	PIN, INSERT	1	029-05900