ITEM	PART NO.	QTY	DESCRIPTION
105	021-01418	4	SCR., CAP HEX HD. 5/16-18UNC X 3/4 LG.
106	021-11980	16	SCR., CAP 12 PT. HD. 3/4-10UNC X 2 1/4 LG.
107	023-04053	1	PLUG, PIPE 3/4 NPT
108	030-13751	1	TAG, CAUTION
109	023-09017	1	TEE, CINCH TYPE, 3/8 X 3/8 X 1/4 MPT
110	364-14955	1	BOX, TERM.
111	064-14959	2	SUPPORT, END TERM. BOX
112	021-11979	4	SCR., CAP 12 PT. HD. 3/8-16UNC X 5/8 LG.
113	364-14997	1	ROTOR, HERMETIC MOTOR
114	SEE SYSTEM DATA PLATE	1	STATOR
115	021-00461	4	NUT, HEX 5/16 -18UNC
116	023-07063	1	PLUG, "O" RING 1 1/16-12 UNC -2
117	064-14975	1	COVER, HANDHOLE
118▲	070-06905	2	GSKT., OIL SIGHT
119▲	026-02634	2	GLASS, OIL SIGHT
120	064-14317	2	SUPPORT, OIL SIGHT
121	028-00774	2	GSKT., OIL SIGHT
122	064-12161	1	PLUG, STATOR LOCKING
123▲	028-05403	1	RING "O" 1 1/8 OD X 15/16 ID X 3/32 SECT.
124	022-01569	1	VALVE, CHECK, 1/4 MPT X 1/4 FPT OUT
125	023-06820	6	ELL. 90° 3/4 TUBE X 3/4 MPT
126	026-09306	1	PUMP, AUX. OIL
126A	026-10904		AUX. OIL PUMP SHAFT SEAL KIT
127▲	064-14976	1	GSKT., [illegible]
128	064-14998	1	FAN
129	013-01016	AS REQ'D	VARNISH, SCOTCHCAST RESIN #2
130	023-04010	1	BUSHING, PIPE, OUTSIDE HEX 3/4 MPT X 1/2 FPT
131	029-00310	1	NAMEPLATE, PUBLICITY 6"

▲PARTS INCLUDED IN KIT 464-21501

ITEM	PART NO.	QTY	DESCRIPTION
132	025-13722	1	CONTROL TEMPERATURE
133	029-00334	1	NAMEPLATE, INSTRUCTION, ROT.
134	029-09432	1	NAMEPLATE DATA, SYSTEM
135	021-03720	10	SCR. DRIVE NO. 4 X 1/4 LG.
136	021-11532	1	SCR., CAP 12 PT. HD. 5/16-24UNF X 1 3/4 L.H.
138	368-00007	1	VALVE, ANGLE STOP 3/4 TYPE
139	070-01541	1	NIPPLE, PIPE 3/4 SCH. 80 X 1 3/8 LG.
140	023-07264	4	ELL, 45° 3/4 TUBE X 3/4 MPT
141	003-00969	8 FT.	TUBE, 3/8 OD X .035 WALL
142	064-21467	1	VOLUTE, L.S. OIL PUMP
143	003-00952	8 FT.	TUBE, 3/4 OD X .049 WALL
144	022-02417	1	VALVE, CHECK 3/8 FPT X 3/8 MPT OUT
145	070-01298	3	NIP., PIPE 1/2 SCH. 40 X 2 1/2 LG.
146	064-15509	1	PUMP, OIL L.S.
147	023-07172	1	ELBOW 45° 1/2 TUBE X 3/8 MPT
148	023-06816	1	ELBOW 90° 1/2 TUBE X 3/8 MPT
149	023-02027	2	PLUG, PIPE, 2 (CSK. SQ.)
150	064-22199	1	CONN. OIL COOLER TO BRGS. (3/4 OD)
151	064-22197	1	CONN. AUX. OIL PUMP DISCH. (1/2 OD)
152	064-22198	1	CONN. AUX. OIL PUMP SUCTION (5/8 OD)
153	021-01244	3	WASHER 9/16 OD X 1/4 ID X .049 TH.
154	023-05811	1	ELL. STREET 90° - 3/8
155	021-11998	1	SCR., CAP 12 PT. HD. 1/2-20UNF X 6 LG.
156	064-20609	1	BRG., SUPPORT, COMPR. END
157	021-03745	1	SCR. MACH. P.R.R. HD. #10-24NC X 3/8 LG.
158	023-06814	1	ELL., 90° 3/8 TUBE X 1/4 MPT
159▲	028-04522	1	RING "O" 1 1/4 OD X 1 ID X 1/8 SECT.

ITEM	PART NO.	QTY	DESCRIPTION
160	023-06801	3	CONN. 3/8 TUBE X 1/4 M.P.T.
161	021-01785	2	SCR. MACH. P.R.R. HD. #10-24NC X 5/8 LG.
162	003-00243	2 FT.	TUBING 1/2 OD X .049 WALL
163	023-05524	2	ELL., STREET 90° 1/4
164	023-07092	2	ELL., 45° 3/8 TUBE X 1/4 MPT
165	023-06803	1	CONNECTOR 1/2 TUBE X 3/8 MPT
166	028-03282	2	RING "O" 1 OD X 3/4 ID X 1/8 THK.
167	023-04832	1	TEE, SCREW 3/4 X 1/2 X 3/8
168	023-04353	1	TEE, SCREW 3/4 X 3/8 X 3/4
169	070-16055	2	NIPPLE, PIPE 3/4 X SCHED. 80 X 3 LG.
170	023-07197	2	ELL. 45° 5/8 TUBE X 1/2 MPT
171	368-00003	1	VALVE, ANGLE STOP 3/8 TYPE 1
172	023-01983	1	PLUG, PIPE 3/8
173	023-04313	1	ELL., SCREW 90° 3/4
174	003-00810	2 FT.	TUBING, 5/8 OD X .049 WALL
175	364-21498	1	BRACKET OIL COOLER & A.O.P.
176	023-06804	2	CONNECTOR 1/2 TUBE X 1/2 MPT
177	021-05289	4	LOCKWASHER 1/4
178	023-06818	1	ELL. 90° 5/8 TUBE X 1/2 MPT
179	023-06725	2	ELBOW, STREET 90° 3/4
180	064-13587	2	ORIFICE - WASHER TYPE 3/16 ORIFICE
181	025-10290	1	BOX, ELECT. OCT. CONCRETE RING
182	025-10291	1	COVER, BOX ELECT. OCT. CONC. RING
183	064-21502	2	COVER, ELECT. END SUPPORT
184	064-15510	1	HOUSING, BEARING
185	029-10646	3	PIN, DOWEL 1/2 X 2 LG.
186	021-11984	3	SCR. CAP 12 PT. HD. 1/2 -20UNF -3A X 1 1/2 LG.

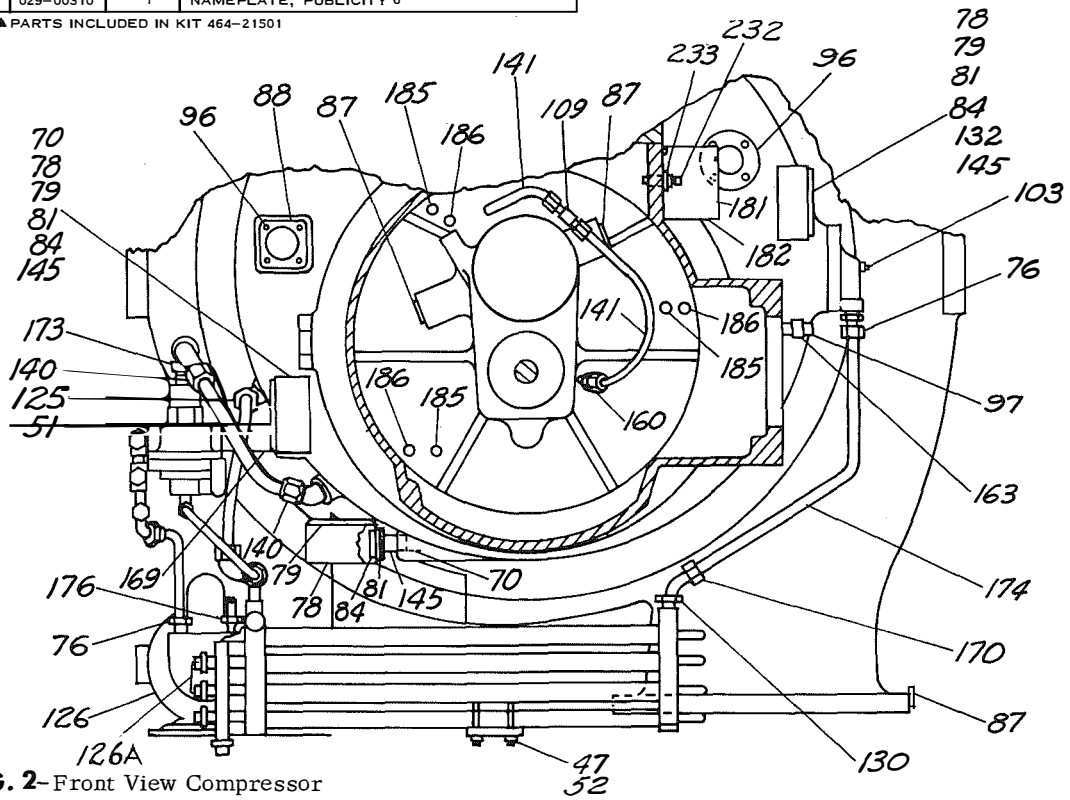

FIG. 2–Front View Compressor

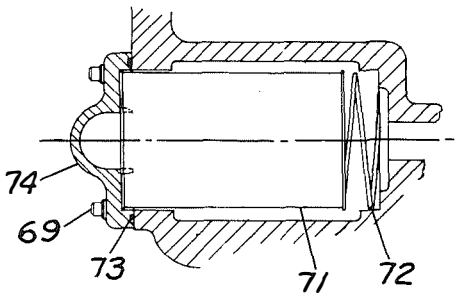

FIG. 3–Filter

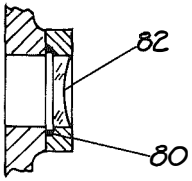

FIG. 4–Oil Sight Glass