Selection | 8632 Venturi

SELECTION from STANDARD 8632 OFFERING

The design of the standard series of North American 8632 Venturi Meters is based on several default parameter choices driven by its most common applications - metering of natural gas or air for burner systems. The Venturi physical dimensions are defined by the pipe size and the choices made to allow a low permanent pressure loss and a design pressure differential. The capacity chart shows the STP air flow rate for pressure differentials from 0.3"w.c. (the recommended minimum use point) to 30"w.c. (transmitter saturation point) across a range of pipe sizes from 3" to 8" ID.

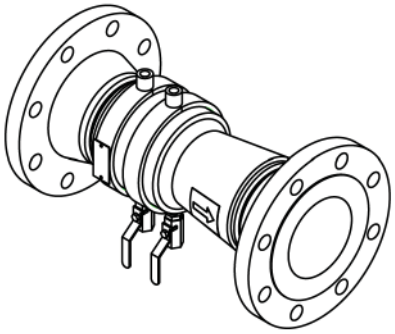

Venturi Selection Example:

Actual Use Conditions: Dry air, 1000' asl elevation (atmospheric pressure 14.177), venturi installed on inlet to blower with no inlet piping resistance, 150,000 scfh flow, 5:1 turndown (to 30,000 scfh) 70°F.

1. Correct the actual STP flow at application conditions to the STP flow at design conditions used in the capacity chart (60°F and 14.696 psia) using the formula:

Q1 =	STP flow at application conditions, scfh
Q2 =	STP flow at design conditions, scfh
T1 =	Application absolute temperature, R
T2 =	Design absolute temperature, R
P1 =	Application absolute pressure, psia
P2 =	Design absolute pressure, psia

$$Q2 = Q1 \sqrt{\left(\frac{T1}{T2}\right)\left(\frac{P2}{P1}\right)}$$

$$Q2 = 150{,}000 \sqrt{\left(\frac{459.67+70}{459.67+60}\right)\left(\frac{14.696}{14.173}\right)} = 154{,}205 \text{ scfh}$$

2. Select a venturi using the following sizing considerations:

— The 30"w.c. differential pressure (dp) column is maximum flow. The Venturi should not be sized at this point to avoid transmitter saturation.

— IMPORTANT: Include a sizing safety factor to avoid transmitter saturation. Always consider the maximum possible flow at given conditions when sizing.

— Below 0.3"w.c. dp the accuracy number will be uncertain.

— After selecting the Venturi based on maximum flow, check that the minimum flow condition is within acceptable conditions with respect to the two points above.

3. Using the following Capacity Chart select an 8632 Venturi for 154,205 scfh gas flow:

— Choose the 8632-8 which has a capacity of 170,208 scfh at the 26.7" design point.

— Check the dp at the minimum flow of 30,841 scfh – it is above the 18,941 scfh flow listed for the minimum dp of 0.3"w.c. and thus in the recommended range.

PERMANENT PRESSURE LOSS and UPSTREAM PRESSURE

To determine Total permanent pressure loss when the Venturi is installed in line and with an upstream piping run:

The estimated total permanent pressure loss when installed can be approximated as 2.8% of DP.

Permanent Pressure Loss Example:

8632-8 designed for 117,261 scfh has a throat differential pressure of 12"w.c.

The permanent pressure loss across the Venturi would be 12"w.c. x .028 = 0.336"w.c.