NPT | Gas Shutoff Valves

Figure 4. Single Valve Body NPT

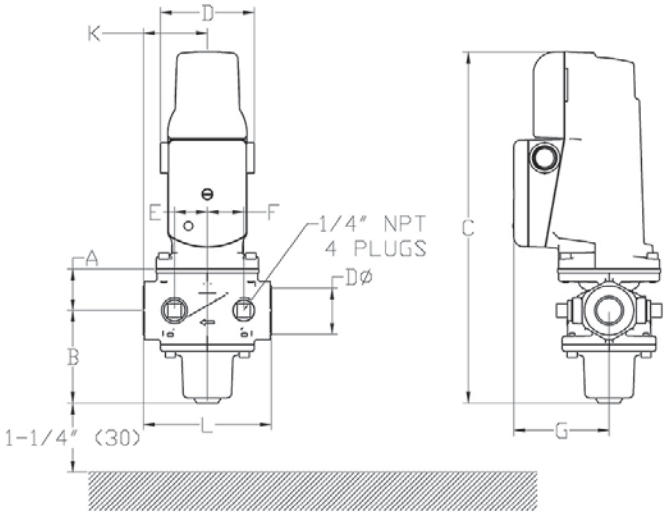

Pipe Size D inch (mm)	A inch (mm)	B inch (mm)	C inch (mm)	D inch (mm)	E inch (mm)	F inch (mm)	G inch (mm)	K inch (mm)	L inch (mm)	Weight lbs (kg)
½ (12.7)	1.25 (32)	3.13 (79)	11.78 (299)	3.15 (80)	1.13 (28)	1.22 (31)	3.20 (81)	2.19 (55)	4.38 (110)	4.05 (1.84)
¾ (19.05)	1.25 (32)	3.13 (79)	11.78 (299)	3.15 (80)	1.13 (28)	1.22 (31)	3.20 (81)	2.19 (55)	4.38 (110)	4.05 (1.84)
1 (25.4)	1.25 (32)	3.13 (79)	11.78 (299)	3.15 (80)	1.13 (28)	1.22 (31)	3.20 (81)	2.19 (55)	4.38 (110)	3.9 (1.79)
1½ (38.1)	1.63 (41)	4 (102)	13.03 (331)	3.15 (80)	1.31 (34)	1.31 (34)	3.20 (81)	3 (75)	5.94 (150)	5.7 (2.59)
2 (50.8)	2 (50)	4.25 (107)	13.65 (346.7)	3.15 (80)	1.31 (34)	1.31 (34)	3.20 (81)	3.38 (85)	6.75 (170)	8.4 (3.81)
2½ (63.5)	3.63 (92)	6.44 (163)	17.46 (443.5)	3.15 (80)	—	2.48 (62)	3.20 (81)	5.69 (145)	11.48 (290)	34.9 (15.83)
3 (76.2)	3.94 (100)	6.44 (163)	17.78 (451.6)	3.15 (80)	—	2.48 (62)	3.20 (81)	6.06 (155)	12.19 (310)	36.4 (16.51)

Figure 5. Double Valve Body NPT

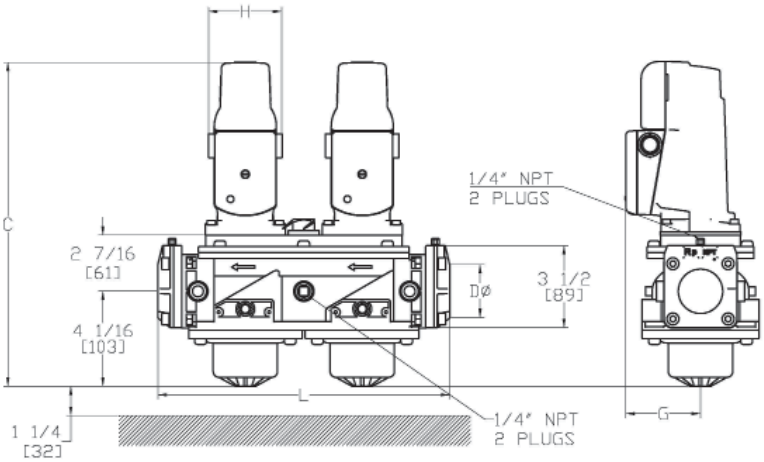

Pipe Size D inch (mm)	C inch (mm)	G inch (mm)	H inch (mm)	L inch (mm)	Weight lbs (kg)
1½ (38.1)	13.9 (353)	3.20 (81)	3.15 (80)	12.19 (310)	9.4 (4.26)
2 (50.8)	13.9 (353)	3.20 (81)	3.15 (80)	12.63 (320)	6.4 (2.90)